TS Electronic Time Delay Switch Unit

Installation Instructions

Fortress Interlocks

General

The TS unit is a robust, solenoid controlled key release interlock with machine isolation. It utilises an industrial, electronic Safety Timer Relay to release the key after a programmable time delay. 24V dc units have settings between 60 and 600 seconds. 110V ac and 230V ac units have settings from 30 to 300 seconds.This is particularly useful when a pre-determined machine run down period is required. The TS unit internal time delay is initiated by turning the integrated isolation switch knob to the vertical position. The released access key is compatible with Fortress' mGard range of trapped key interlocks. These provide an efficient and flexible range of products to suit diverse applications. When the isolation switch knob is in the vertical (machine off) position, the central piece can be extracted and pad locked in place. When properly installed, the TS unit provides safe access and control of a variety of machinery.

IMPORTANT

ALL supplies must be isolated before the TS unit is opened This product is designed to meets the requirements of the following standards, EN 60947-5 and EN 954

IF YOU HAVE ANY QUESTIONS OR QUERIES OF ANY NATURE WHATSOEVER PLEASE CONTACT THE SUPPLIER WHO WILL BE PLEASED TO ADVISE AND ASSIST.

Functioning

When the isolation switch knob is rotated anti-clockwise, an electronic Safety Timer Relay is initiated and the blue "Timer Active" indicator lamp will illuminate. The machine supply is instantly isolated.

After the user programmable time period has expired, the blue lamp will extinguish and the green "Energise Solenoid" push button will illuminate.

At this point, it is still possible to cancel the timer request by rotating the isolation switch knob to the horizontal position. Once the green "Energise Solenoid" push button is depressed, the access key becomes free to rotate and remove from the unit.

The green lamp remains illuminated to signal the access key has been removed and the isolation switch knob becomes trapped. Once the access key is re inserted, both lamps extinguish and the isolation switch knob becomes free to rotate. The machine supply is restored.

Tools and Fixings Required

- Large cross-head screwdriver.
- Drill and Tap for M6 bolts (if used (Recommended)).
- Suitable driver for fixings used 3.5mm Flat blade electrical screwdriver .
- 4 x M6 Cap-head or Pan-head screws or
- 4 x No.10 Woodscrews (depending on mounting surface).
- 4 x Suitable woodscrew plugs if required.

Mounting

This unit would normally be installed on a vertical surface, such as a wall or the machine cabinet. Other orientations are possible as long as access to the illuminated push buttons, key and nomenclature is ergonomic for the application. The surface must be suitably robust, flat and non-movable.

Protection Against Environmental Influences

A lasting and correct safety function requires that the unit be protected against the ingress of foreign bodies such as swarf, sand, blasting shot, etc. The unit is to be mounted away from the machine, or by the use of anti-vibration mountings, in order to avoid the effects of vibration, shock and bump.

1. Determine the location of the TS unit so that operation of the illuminated push buttons and key are possible.
2. Using the large cross-head screwdriver, loosen the 4 lid screws. Remove the lid assembly complete with the retained screws.

N.B. Do not hang the lid by the interconnecting wiring loom as this may cause damage to the unit.

3. Using the adaptor provided with the TS unit, together with the large cross-head screwdriver, remove the 4 joining tubes that fix the extension piece to the enclosure.
4. Mount the enclosure assembly to the mounting surface. Use M6 screws or the woodscrews through the unit. If the unit is mounted to a mounting plate, it should be of minimum thickness 3mm.

NB Ensure that any screws that protrude through any mounting surface are covered and do not interfere with any other wiring or equipment.

All fixing screws must be permanently prevented from removal, either by vibration or by personnel using standard tools.

5. Using the adaptor provided, together with the large cross-head screwdriver, re-assemble the 4 joining tubes with the extension piece, to the enclosure. Ensure all four joining tubes are tight.
6. Determine the best position for the cable entries and drill the box for them, ensuring no damage to any internal components or wiring. All wiring must use cable glands that are suitable for the application.
7. Fix the cable glands in place and feed in the electrical wiring, taking care not to interfere with the internal TS wiring.
8. Make the electrical connections as detailed below.

Electrical Connection

1. Check that the operating voltage of the unit to be installed is of the same electrical type and voltage rating as the machine control circuits. This information can be found on the laser mark on the front of the TS unit. Note that all units are designed to operate at +/-10% of the nominal supply voltage. The use of an incorrect voltage can seriously damage the unit. AC units are suitable for 50/60 Hz.
2. Double check that the electrical supply is isolated and attach suitable conduit(s) via the previously fitted cable gland(s). Correct size cable glands/blanking plugs must be used to achieve IP67 sealing.
3. Bond the enclosure to Earth potential via the Earth point provided (Terminal 1). The earth wire used must be multi-stranded Yellow and Green PVC sheathed and approved to BS 6231 with conductor cross-sectional area of 2.5mm². The Earth lead must be fitted such that it will be the last to be broken if the wiring loom is pulled from the product.
4. Make the electrical connections, referring to the information below.

The TS unit incorporates fuse protection for the unit supply. The unit supply fuse is rated at 1A, 250V slow blow to IEC 127. The fuse is 20mm x 5mm diameter.

User connections are as follows:

Terminal 1. Earth
Terminal 2. (Permanent Supply)
Permanent supply to the TD unit. This terminal incorporates the internal fuse.
Terminal 3: (Supply Common Return)
For DC installations, connect this terminal to 0V of the machine control system. For AC installations, this will be Neutral.

Ensure that the key is in and trapped and that the isolation switch knob is horizontal.

Motor	3 Phase	1 Phase
120V	5HP	2HP
240V	10HP	5HP
277V	-	5HP

En60947 / VDE0660 / IEC60947	AC-15	AC-23A - kW		AC-3A - kW		AC-21A
		3 Phase	1 Phase	1 Phase	3 Phase	Iu = Ith
220V - 240V	12A	7.5	4	5.5	4	32A
380V - 440V	6A	15	7.5	11	5.5	
500V - 690V	-	15	-	11	-	

Terminal 4: Blue in 3 phase machine supply
Terminal 5. Red in 3 phase machine supply
Terminal 6. Yellow in 3 phase machine
Terminal 7. Blue out 3 phase machine supply
Terminal 8. Red out 3 phase machine supply
Terminal 9. Yellow out 3 phase machine supply

Setup

Mechanical Function Test (Unpowered)
Ensure the key is trapped in the TS unit and the isolation switch knob is free to rotate 90°

1. Turn the isolation switch from the horizontal position to the vertical.
2. Open lid to depress the solenoid plunger to allow the removal of the key from the unit.
3. Replace the lid of the TS unit.
4. Check that the isolation switch knob locks in the vertical position.
5. Ensure that the key from the TS unit operates the mechanical interlocking system in place. The key must only be available when all other protected guards are closed and locked.
6. Insert the key into the lock. It must lock in position after it is turned.

Electrical Function Test

NEVER OPEN THE UNIT FOR ANY REASON, INCLUDING ADJUSTMENT WITHOUT ISOLATING THE MACHINE.

N.B The Safety Timer Relay delay period is programmable and may need to be adjusted to suit the machine run down period as determined by a risk assessment.

The time delay is adjusted by rotating a red rotary switch on the Safety Timer Relay with a small electrical screw driver, the Safety Time Relay is located inside the TS unit.

1. Supply power to the TS unit and ensure the access key is trapped. Neither lamp should be illuminated.
2. Turn the isolation switch and ensure the blue "Timer Active" lamp illuminates.
3. Ensure the machine 3 phase supply is isolated.
4. After the pre-programmed time period, observe the blue "Timer Active" lamp extinguishes and the green "Energise Solenoid" lamp illuminates.
5. Depress the "Energise Solenoid" button and ensure it is possible to release the access key.
6. Once the access key is released, ensure the isolation switch has become trapped.
7. Re-insert and turn the access key and observe the green lamp extinguish. Ensure the isolation switch has now become free.
8. Ensure 3 phase supply is restored.

Fortress Interlocks

Dimensions Diagram

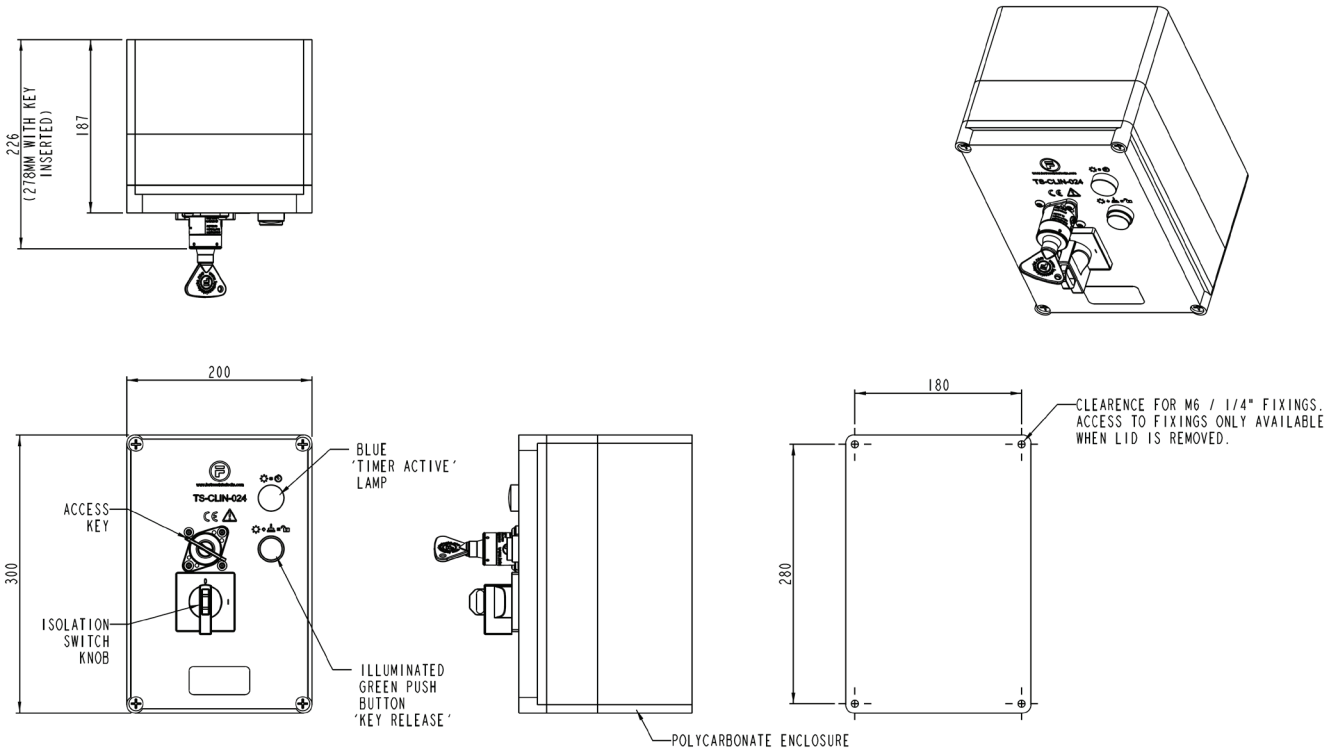

Terminal Diagram

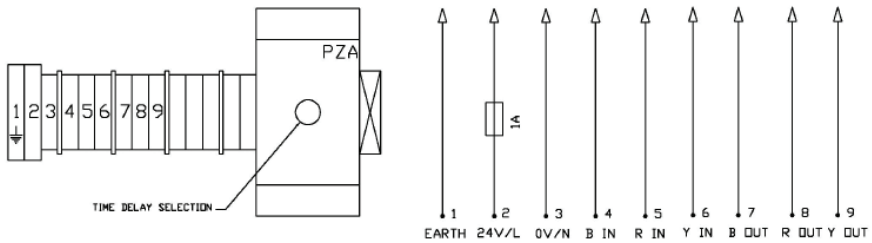

Service and Inspection

Regular weekly inspection of the following is necessary to ensure trouble-free, lasting operation:

- Correct switching function
- Secure mounting of components
- Debris and wear
- Sealing of cable entry
- Loose cable terminals or plug connectors

The Lock Assembly should be lubricated with WD40 lubricant, every 10,000 operations.

There are no user serviceable parts in the TS unit. If damage or wear is found with an assembly, please contact your local Fortress stockist. The complete interlock must be replaced after 1 million switching operations.

Disposal

This interlock does not contain any certified hazardous materials so should be disposed of as industrial waste.

Liability coverage is voided under the following conditions:
- if these instructions are not followed
- non-compliance with safety regulations
- installation and electrical connection not performed by authorised personnel
- non-implementation of functional checks.

The manufacturer reserves the right to modify the design at any time and without notice.

This guide should be retained for future reference.