# SLS - Solenoid Locking Station

# Installation Instructions

Fortress Interlocks

SLS with CL

## KeyGard SLS
**(Solenoid Locking Station)**
The SLS is a robust, heavy duty, solenoid controlled key exchange unit. This unit is to be fixed to a machine control panel.

## IMPORTANT
This product is designed for use according to the installation and operating instructions enclosed. It must be installed by competent and qualified personnel who have read and understood the whole of this document prior to commencing installation.
Any modification to or deviation from these instructions invalidates all warranties. **Fortress** Interlocks Ltd accepts no liability whatsoever for any situation arising from misuse or mis-application of this product. This product is not to be used as a Mains Isolator or Emergency Stop. The unit is a component to be added to a permanent electrical installation meeting the requirements of the applicable IEC/EN standards.

**The voltages used on the SE terminals must all be of the same type. i.e. ALL Hazardous Live or ALL Machine Extra Low Voltage.**

**IF YOU HAVE ANY QUESTIONS OR QUERIES OF ANY NATURE PLEASE CONTACT THE SUPPLIER WHO WILL BE PLEASED TO ADVISE AND ASSIST.**

## Tools and Fixings Required
Pin Hex Driver Bit (Available Separately)
¼" Driver (to suit above)
M5 Tap or ∅5.5 Drill
3.5mm Flat Blade Electrical Screwdriver
6 x M5 Screws
6 x M5 Nuts
6 x M5 Washers

## Mounting
Mount this unit well away from sources of vibration or use anti-vibration mountings in order to avoid the effects of vibration, shock and bump.

Mount the unit only in its correctly assembled condition to flat metal plate of minimum thickness 3.0mm.

1. Locate the unit so that the label and LED are clearly visible
and so all the locks are within easy reach.
2. Machine the panel as show in figure 2.
3. Mount the unit behind the panel using the 6 M5 screws, nuts and washers as applicable.
4. All fixing screws must be permanently prevented from removal, either by vibration or by personnel using standard tools.

## Electrical Connection
Check that the unit to be installed is of the same electrical type and voltage rating as the machine control circuits. Note that all units are designed to operate at +/-10% of the nominal supply voltage. The use of an incorrect voltage can seriously damage the unit .

**The electrical system must incorporate fuse protection for all circuits, using a Quick-Acting (F) fuse (maximum rating 3A, 250v to IEC 127).**

Make the electrical connections refering to figure 3

Terminals 1-2 & 5-6 and N/C contacts opened mechanically by the solenoid operating. These are normally used as the soleniod operated safety circuit.
Terminals 3-4 are N/O contacts closed mechanically by the solenoid operating. This is normally used as the solenoid operated monitoring circuit.
Terminals 7-8 & 11-12 are N/C contacts opened mechanically by the removal of the control key. These are normally used as the key operated safety circuit.
Terminals 9-10 are N/O contacts closed mechanically by the removal of the control key. These are normally used as the key operated safety monitoring circuit.
Terminals 13-14 are the solenoid and LED power supply. For DC units, terminal 13 is positive (+) and 14 is negative (-).
Terminals 15 is earth.

## Functionality
**Key Trapped State**
When the solenoid is not energised, all the keys apart from the override key are trapped. All the safety circuits are closed and all the monitoring circuits are open. The LED is not lit. **Key Unlocked State**
When voltage is applied to the solenoid, the solenoid safety circuits are positively opened and the solenoid monitoring circuit is closed. The green LED lights up.
**Key Free State**
When the control key is removed, the key operated safety circuits are positively opened and the key operated monitoring circuit is closed. This allows the removal of the other keys.
**Solenoid Override**
1. Insert the override key into the override lock.
2. Remove the control key.
3. Remove the other keys as necessary.
4. Remove the override key.

## Replacement of Locks
1. Electrically isolate the machine and ensure the supply cannot be accidentally re-instated.
2. Remove the key from the lock you wish to replace if necessary.
3. Remove the two pin hex screws from the lock or lock cover plate using the pin hex driver bit.
4. Remove the key from the replacement lock if necessary.
5. Mount the replacement lock onto the front plate making sure that it is orientated correctly so the dust cover opens upwards.
6. Replace the pin hex screws .
7. Re-instate electrical supply and conduct commissioning test.

## Commissioning
**Mechanical Function Test**
1. Insert all the keys except the override keys into the appropriate locks.
2. Check that all the keys are trapped in position.
3. Use the override key to allow the removal of the other keys.

SLS with CL

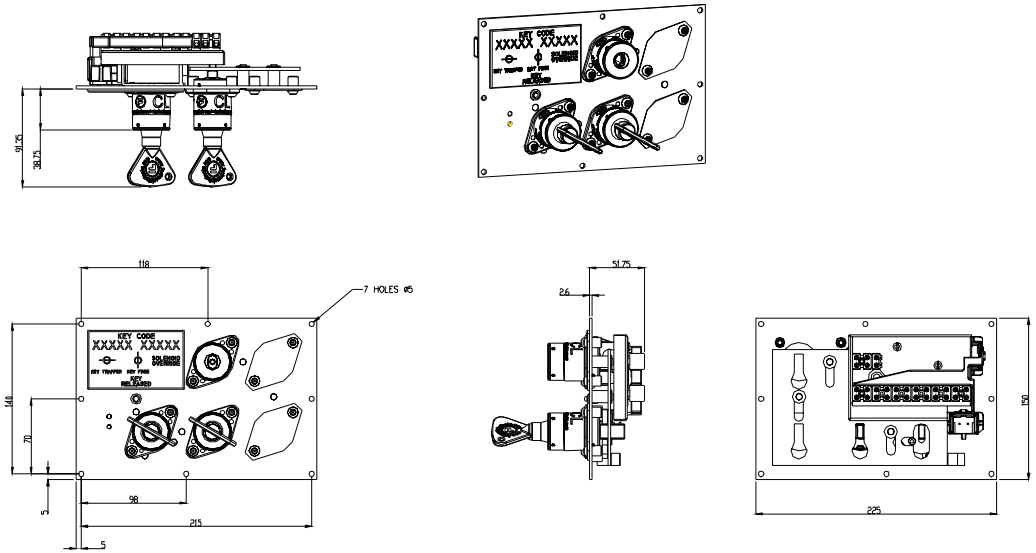


**Electrical Function Test**
1. Check that all the switches are in the states shown in the wiring diagram.
2. Apply voltage to the solenoid and check that the green LED lights.
3. Check that the solenoid safety circuits are open and the solenoid monitoring circuit is **closed.**
4. Removed the control key.
5. Check that the key operated safety circuits are open and the key operated monitoring circuit is closed.

## Service and Inspection
Regular weekly inspection of the following is necessary to ensure trouble-free, lasting operation:
1 Correct switching function
2 Secure mounting of components
3 Debris and wear
4 Loose cable terminals.

There are no user serviceable parts in this unit. If damage or wear is found the whole unit must be replaced. If lubrication is required use a high temperature grease such as Rocol Sapphire Hi-Temp2.
**Do not use dry lubricant.**

## Disposal
This interlock does not contain any certified hazardous materials so should be disposed of as industrial waste.

Liability coverage is voided under the following conditions :
1. If these instructions are not followed.
2. Non-compliance with safety regulations.
3. Installation and electrical connection not performed by authorised personnel
4 Non-implementation of functional checks.

## Environmental Specification
Environment Type **Indoor**
Max. Altitude **2000m**
Ambient Temperature **-5°C to +40°C**
Maximum Relative Humidity
**80%@<=31°C**
**50%@40°C**
Transient Overvoltages Installation
**Uimp 2500V**
Pollution Degree (IEC 664)
**Degree 2**

**The manufacturer reserves the right to modify the design at any time and without notice. This guide should be retained for future reference.**