FLP Key Operated Rotary Switch

Installation Instruction for CL, CLS, ML & MLS lock portions

Fortress Interlocks

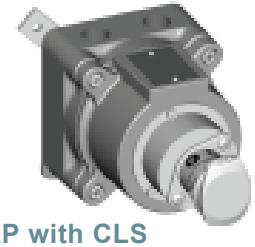

FLP with CLS

Description

The FLP (Solenoid Switch) is a robust, heavy duty, solenoid controlled, key operated switch.

The KGRSE is similar to the KGRS but is sealed against ingress of liquids and dust.

IMPORTANT

This product is designed for use according to the installation and operating instructions enclosed. It must be installed by competent and qualified personnel who have read and understood the whole of this document prior to commencing installation.

Any modification to or deviation from these instructions invalidates all warranties. **Fortress** Interlocks Ltd accepts no liability whatsoever for any situation arising from misuse or mis-application of this product. This product is not to be used as a Mains Isolator or Emergency Stop. The unit is a component to be added to a permanent electrical installation meeting the requirements of the applicable IEC/EN standards.

The voltages used on the KGRS & KGRSE terminals must all be of the same type. i.e. ALL Hazardous Live or ALL Machine Extra Low Voltage.

IF YOU HAVE ANY QUESTIONS OR QUERIES OF ANY NATURE PLEASE CONTACT THE SUPPLIER WHO WILL BE PLEASED TO ADVISE AND ASSIST.

Tools and Fixings Required

KeyGard FLP
M6 Tap or Ø 6.5 Drill
3.5mm Flat Blade Electrical Screwdriver

Tools and Fixings Required

KeyGard FLP
M6 Tap or Ø 6.5 Drill
3.5mm Flat Blade Electrical Screwdriver
2 x M6 Screws
2 x M6 Nuts
2 x M6 Washers

KeyGard FLP
M4 Tap or Ø 4.5 Drill
3.5mm Flat Blade Electrical Screwdriver
4 x M4 Screws
4 x M4 Nuts
4 x M4 Washers

Mounting

Mount this unit well away from sources of vibration or use anti-vibration mountings in order to avoid the effects of vibration shock and bump.
Mount the unit only in its correctly assembled condition to flat metal plate of minimum thickness 3.0mm.
1 Locate the unit so that all the lock is within easy reach.
2 Machine the panel
3 Mount the unit to the panel using the 2 M6 screws, nuts and washers, as applicable.
4 All fixing screws must be permanently prevented from removal, either by vibration or by personnel using standard tools.

Electrical Connection

Check that the unit to be installed is of the same electrical type and voltage rating as the machine control circuits. Note that all units are designed to operate at +/-10% of the nominal supply voltage. The use of an incorrect voltage can seriously damage the unit.**The electrical system must incorporate fuse protection for all circuits, using a Quick-Acting (F) fuse (maximum rating 3A, 250v to IEC 127).**

Please refer to ***figure 3*** for the Terminal Numbers for the Key Operated Rotary Switch.
Bond the unit to Earth potential via the Earth point provided. The earth wire used must be multi-stranded Yellow and

Green PVC sheathed and approved to BS 6231 with conductor cross-sectional area of 2.5mm².

The Earth lead must be fitted such that it will be the last to be broken if the wiring loom is pulled from the product.
When all wiring is complete, conduct a Protective Earth Test to BS 60204, clause 20. Test the unit for correct operation.

Commissioning

Electrical Function Test
1 Check that all the switches are in the states shown in the wiring diagrams - see figures 3.
2 Insert the key and turn 90° clockwise.
3 Check that the key operated rotary switch changes state.

Service and Inspection

Regular weekly inspection of the following is necessary to ensure trouble-free, lasting operation:
1 Correct switching function
2 Secure mounting of components
3 Debris and wear
4 Loose cable terminals.

If lubrication/cleaning is required use WD40. The frequency of lubrication/ cleaning will depend on the environment. Lubricate/clean at least once a week when used in the concrete industry.
Do not use dry lubricant.

Disposal

This interlock does not contain any certified hazardous materials so should be disposed of as industrial waste.

FLP with CLS

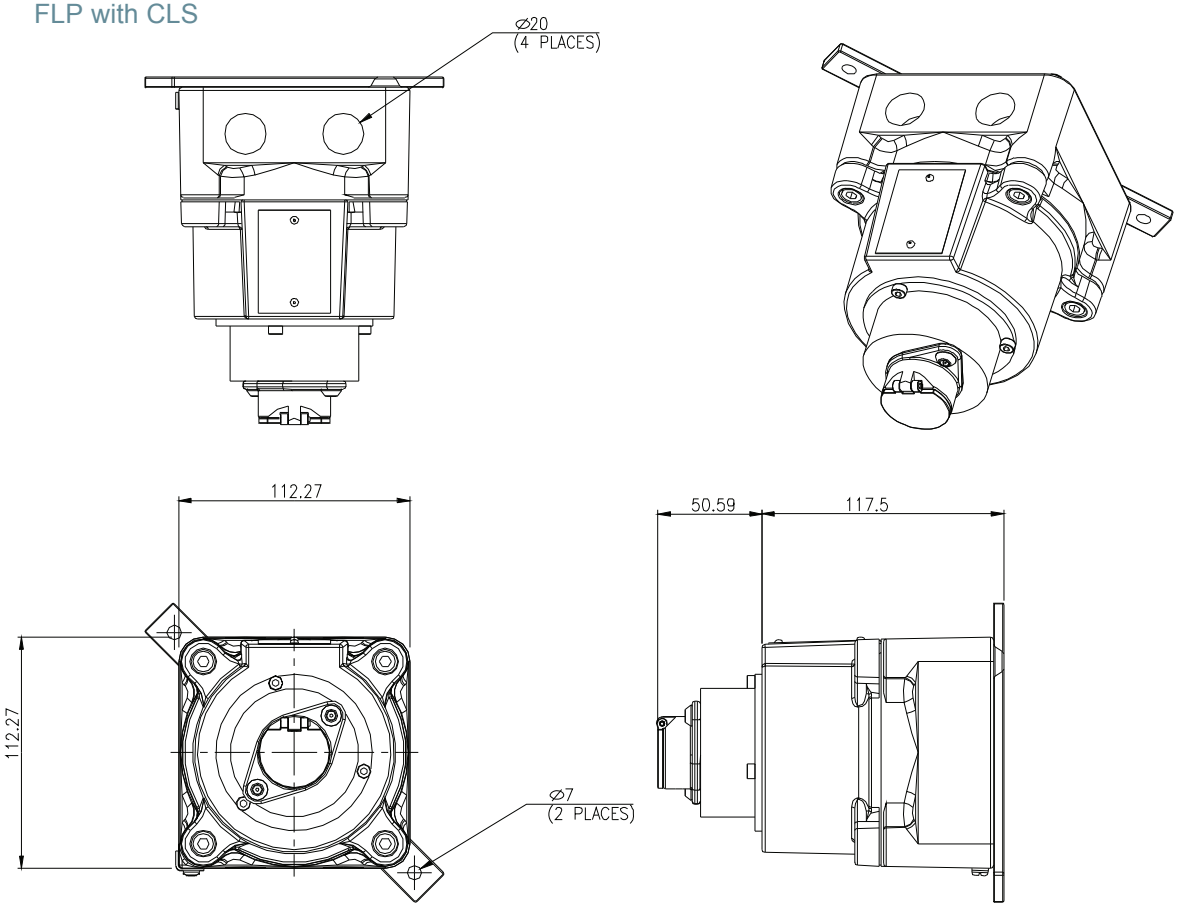

Liability coverage is voided under the following conditions:

1 If these instructions are not followed.
2 Non-compliance with safetyr regulations.
3 Installation and electrical connection not performed b y authorised personnel
4 Non-implementation of functional checks.

The manufacturer reserves the right to modify the design at any time and without notice. This guide should be retained for future reference.

Environmental Specification

Environment Type	**Indoor**
Max. Altitude	**2000m**
Ambient Temperature	**-5°C to +40°C**
Maximum Relative Humidity	**80%@<=31°C 50%@40°C**
Transient Overvoltages Installation	**Uimp 2500V**
Pollution Degree	**(IEC 664) Degree 2**
Ingress Protection	**IP00**