EEXSS1 Explosion Proof Solenoid Switch

EEX-SS
with CL

The EEXS on protected, sure that is ATE 11 2 GD, EEX 11 C T6 IP66 T85°C according to CENELEC standard EN5004, EN50018 and EN50281-1-1.

Note
The installer/user must adhere to the BARTEC enclosure, installation and maintenance instructions, supplied with the product. If this is not with the product upon receipt, please contact Fortress Interlocks.

IMPORTANT

The unit must be installed by competent and qualified personnel who have read and understood these instructions. Any deviation from these instructions invalidates all warranties.

Warning

Improper Installation

These instructions provide information that pertains to all products with conduit openings and are to be used in conjunction with the specific instructions provided with each product.

Strictly adhere to all installation instructions.

Failure to comply with these instructions could result in death or serious injury.

Warning

Opening Products Hazard

DO NOT OPEN these products when energised or in a flammable gas atmosphere. Failure to comply with these instructions could result in death or serious injury

Warning

Improper Conduit Thread Use

DO NOT USE any other conduit thread than the one identified on the product. Verify that the mating threaded fitting is the same size and pitch as the enclosure conduit opening (Normally M20 x 1.5). Failure to comply with these instructions could result in death or serious injury.

General Information

Where possible, install this product with the conduit opening pointed down.

Mounting the unit upside down is not recommended as condensation problems may develop. Also, do not install at the low point of a conduit run.

Failure to comply with these instructions may result in product damage.

Following the manufacturer's instructions, install a fitting into the conduit opening. Ensure the fitting provides strain relief to the wires/cables, as well as sealing against contaminants that is appropriate to the application.

In applications where fluids or moisture may be present, seal the fitting threads with a product such as Teflon tape or pipe dope.

We strongly recommend the use of all available threads to ensure adequate installation.

Proper sealing ensures explosion protection integrity of the conduit system.

Fortress explosion protected switches are designed specifically for use in hazardous location applications and is sealed to IP66 as defined in IEC 529. The enclosure meets the European Hazardous Locations Designation: EExd IIC T6 category II 2.

The EEXSS1 complies with the European Directive on Equipment and Protective Systems intended for use in potentially explosive atmospheres (94/9/EC) commonly referred to as the ATEX Directive. Compliance with the essential health and safety requirements has been assured by compliance with EN50014 1997 and EN50018 1994.

The EEXSS1 is ideal for outdoor use or in adverse environments where a combination of explosion protection plus sealing requirements are needed. To comply with explosion protection requirements the EEXSS1 has flame paths within the housing, which cool exploding gases below the ignition temperature before they reach explosive gases surrounding the housing. Flame paths on the unit are (1) an extended plunger between the switch cavity and lock and (2) the cover-housing treads on the front of the unit.

Installation Instruction

Fortress Interlocks

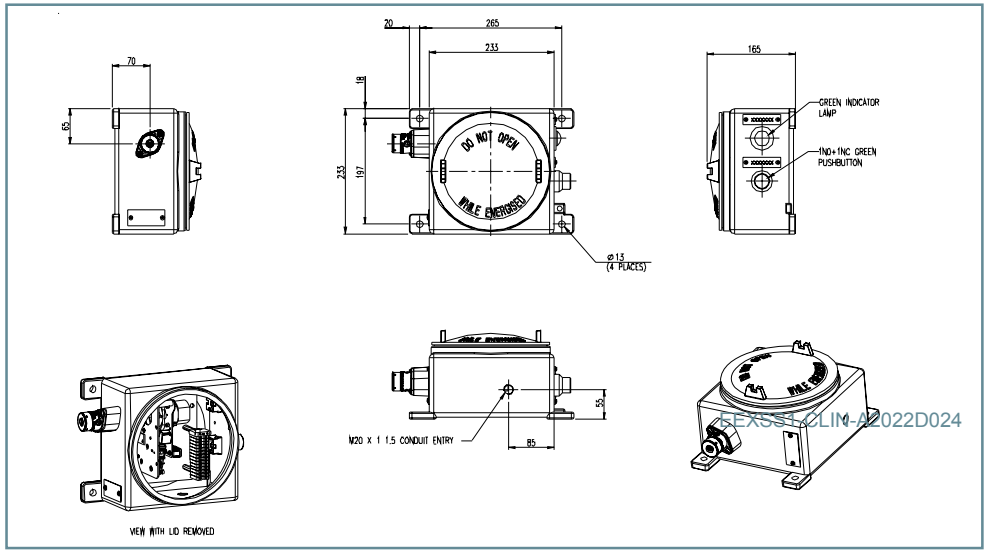

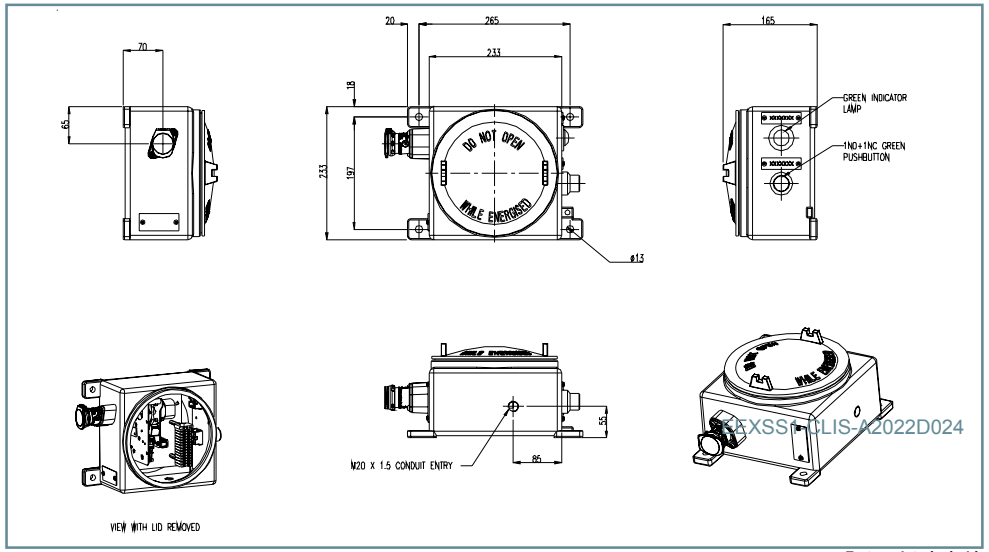

Fortress Interlocks Limited
2 Inverclyde Drive
Wolverhampton, UK, WV46FB
Tel: +44 (0) 1902 349000
Fax: +44 (0) 1902 349090
E-mail: sales@fortressinterlocks.com
Web Site: www.fortressinterlocks.com

mGard

m_eex_ss1

EEXSS1 - Explosion Proof Solenoid Switch

Installation Instruction

Fortress Interlocks

Tools and Fixings Required

4 x M12 Machine Screws
4 x M12 Washers
4 x M12 Nuts (If required for bolting to a plate)
Allen Key (Supplied with unit to secure the hatch)

Mounting

Mount the unit to flat metal plate of minimum thickness 3.0mm.

1. Locate the unit so that the lock is within easy reach
2. Mount the unit to the panel using the screws, nuts and washers as applicable
3. All fixing screws must be permanently prevented from removal, either by vibration or by personnel using standard tools.
4. The cable gland must be sealed against ingress of dust and liquids. See over for details.

Electrical Connection

Check that the unit to be installed is of the same electrical type and voltage rating as the system control circuits. Note that all units are designed to operate at +/-10% of the nominal supply voltage. The use of an incorrect voltage can seriously damage the unit. The electrical system must incorporate fuse protection for all circuits, using a Quick-Acting (F) fuse (maximum rating 3A, 250v to IEC 127).

The earth wire used to bond the unit to Earth potential must be multi-stranded Yellow and Green PVC sheathed and approved to BS 6231 with conductor cross-sectional area of 2.5mm². The Earth lead must be fitted such that it will be the last to be broken if the wiring loom is pulled from the product.

Terminals + and - are the solenoid power supply. Whether this supply is AC or DC will depend on the solenoid type ordered. The supply can be connected either way round.

Whenever power is applied accross these terminals, the pilot lamp will illuminate. Pressing the push button when the lamp is illuminated will energise the solenoid.

Terminals 1 and 2 are N/C contacts opened mechanically by the solenoid operating. These are normally used as the solenoid operated safety circuits.

Terminals 3 and 4 are N/C contacts opened mechanically by the solenoid operating. These are normally used as the solenoid operated safety circuits. This circuit is in parallel to 1-2 above.

Refer to wiring diagram for switch contact details.

When all wiring is complete, conduct a Protective Earth Test to BS 60204, clause 20 to all accessible metal parts. Test the unit for correct operation:

Functionality

Key Trapped State (With Gate Key Inserted)

When the solenoid is not energised, the key is trapped. The solenoid operated safety circuits 1-2 and 3-4 are closed.

The Rotary Switch contacts 5-6 & 9-10 are closed. All other switch circuits are open.

Key Unlocked State

When voltage is applied to the solenoid, the solenoid safety circuits are positively opened.

The rotary switch contacts do not change state until the key is removed.

Key Free State

When the control key is removed, the contacts on the rotary switch change state.

The solenoid operated switch contacts 1-2 and 3-4 remain open, even if the solenoid is de-energised.

Commissioning

Mechanical Function Test

1. Isolate electrical supplies
2. Insert the key
3. Check that the key is trapped in position.
4. Manually override the solenoid to allow the removal of the key, by pressing on the rotational actuator as shown.

Electrical Function Test

N.B Ensure there are no potentially explosive gases present before starting this test. Also ensure none are allowed to build up during the electrical test.

1. Check that all the switches are in the states shown in the wiring diagram
2. Insert the key
3. Check the switch circuits are described as above.
4. Apply voltage to the solenoid.
5. Check that the solenoid safety circuits are open.
6. Remove the control key.
7. Check that the key operated rotary switch changes state.

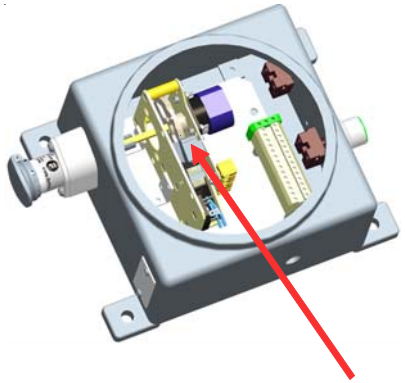

Rotational Actuator

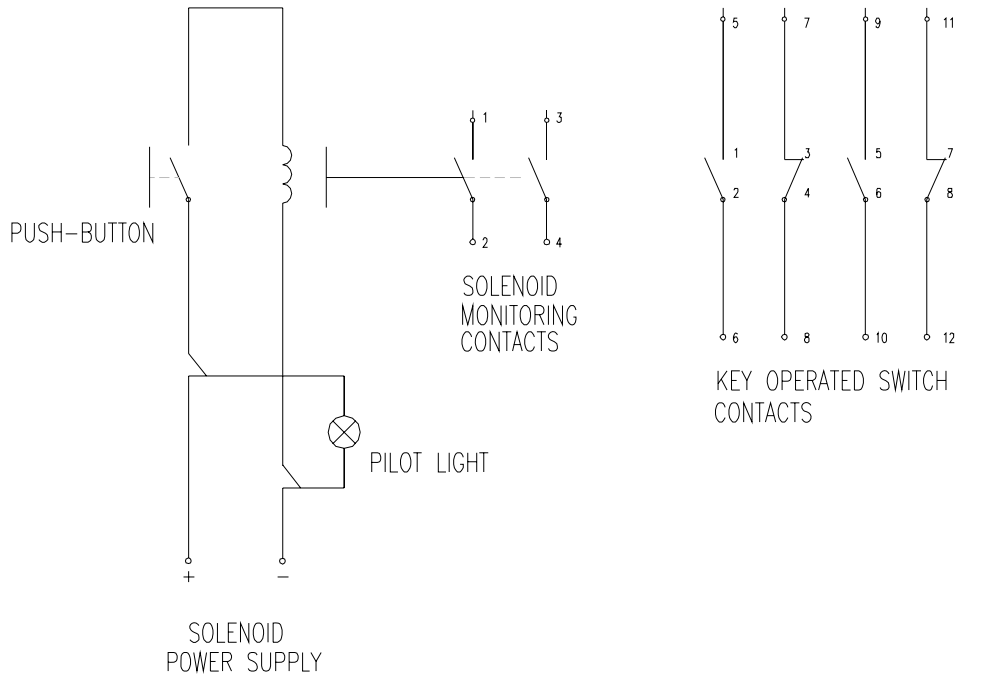

wiring diagram

Fortress Interlocks Limited
2 Inverclyde Drive
Wolverhampton, UK, WV46FB
Tel: +44 (0) 1902 349000
Fax: +44 (0) 1902 349090
E-mail: sales@fortressinterlocks.com
Web Site: www.fortressinterlocks.com

mGard