Fortress Interlocks

mGard

Installation Instructions

Power & Control Isolation

Mini Solenoid Controlled Key Switch in enclosure.

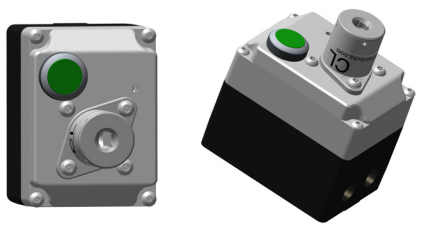

The mini SSR unit is used where the key needs to remain trapped until an electrical signal has been received and where space is limited. When the signal is received the push button illuminates. On pressing the illuminated push button the key is released.

The solenoid release push button can be laser marked upon request with 2 lines of text containing no more than 8 characters per line.

IMPORTANT

This product is designed for use according to the installation and operating instructions enclosed. It must be installed by competent and qualified personnel who have read and understood the whole of this document prior to commencing installation. If the equipment is used in a manner not specified by the manufacturer, the protection provided by the equipment may be impaired. Any modification to or deviation from these instructions invalidates all warranties. Fortress Interlocks Ltd accepts no liability whatsoever for any situation arising from misuse or misapplication of this product. This product is not to be used as a Mains Isolator or Emergency Stop. The unit is a component to be added to a permanent electrical installation meeting the requirements of the applicable IEC/EN standards.

The voltages used on the MSSR terminals must all be of the same type. i.e. ALL Hazardous live or ALL Machine Extra Low Voltage.

IF YOU HAVE ANY QUESTIONS OR QUERIES OF ANY NATURE WHATSOEVER PLEASE CONTACT THE SUPPLIER WHO WILL BE PLEASED TO ADVISE AND ASSIST.

Switch Approvals

Tools and Fixings Required
Back of Board

Dia. 5.5 Drill
3.5mm Flat blade electrical screwdriver
4 x M5 screws
4 x M5 washers

Mounting
Mount this unit well away from sources of vibration or use anti-vibration mountings in order to avoid the effects of vibration, shock and bump.

Mount the unit only in its correctly assembled condition to flat metal plate. A sound earth connection must be made to the case.

1. Locate the unit so that the lock is within easy reach.
2. Machine the panel as shown in Fig.1 and Fig 2.
3. Mount the unit to the panel using the 4 M5 screws and washers as applicable.
4. All fixing screws must be permanently prevented from removal, either by vibration or by personnel using standard tools.

Electrical Connection
Check that the unit to be installed is of the same electrical type and voltage rating as the machine control circuits. Note that all units are designed to operate at +/-10% of the nominal supply voltage. The use of an incorrect voltage can seriously damage the unit.
The electrical system must incorporate fuse protection for all circuits, using a Quick-Acting (F) fuse (maximum rating 3A, 250V to IEC 127).

Terminals 1-3 and 2-4 are N/C contacts opened mechanically by the solenoid operating. These are normally used as the solenoid operated safety circuits.

Terminals 5-6 are the solenoid power supply. For D.C. terminal 5 is the 24V supply and terminal 6 is the OV.

Terminals 7-9 and 8-10 are N/C contacts opened mechanically when the key is turned and released. These are normally used as the key operated safety circuits.

The earth wire used to bond the unit to Earth potential must be multi-stranded Yellow and Green PVC sheathed and approved to BS 6231 with conductor cross-sectional area of 2.5mm^2.

The Earth lead must be fitted such that it will be the last to be broken if the wiring loom is pulled from the product.

When all wiring is complete, conduct a Protective Earth Test to BS 60204, clause 20 to all accesible metal parts. Test the unit for correct operation.

Functionality
Key Trapped State
When the solenoid is not energised, the key is trapped. The solenoid operated safety circuits and key safety circuits are closed.

Key Unlocked State
When voltage is applied to the solenoid the push button illuminates. On pressing the illuminated push button the solenoid safety circuits are positively opened.

Key Free State
When the control key is removed, the contacts on the key safety circuits are positively opened.

Commissioning
Mechanical Function Test
1. Isolate electrical supplies.
2. Insert the key.
3. Check that the key is trapped in position.
4. Manually override the solenoid to allow the removal of the key.

Electrical Function Test
1. Check that all the switches are in the states shown in the wiring diagrams.
2. Apply voltage to the solenoid.
3. Check that the solenoid safety circuits are open when the illuminated push button is pressed.
4. Remove the control key.
5. Check that the key operated safety circuits changes state.

Service and Inspection
Regular weekly inspection of the following is necessary to ensure trouble-free, lasting operation.
1. Correct switching function.
2. Secure mounting of components.
3. Debris and wear.
4. Loose cable terminals.

There are no user serviceable parts in this unit. If damage or wear is found the whole unit must be replaced. If lubrication/cleaning is required use WD40. **DO NOT USE DRY LUBRICANT.**
Lubrication/cleaning will depend on the environment. Lubricate/clean at least once a week when used in the concrete industry.

Disposal
This interlock does not contain any certified hazardous materials so should be disposed of as industrial waste.

Liability coverage is voided under the following conditions:
1. If these instructions are not followed.
2. Non-compliance with safety regulations.
3. Installation and electrical connection not performed by authorised personnel.
4. Non-implementation of functional checks.

Technical Specification

Enclosure	Painted die-cast zinc	
Lock Mechanism	Die-cast zinc body with stainless steel	
B10d	5,000,000	
Mechanical & Electrical Life	1,000 000 operations	
Solenoid Power Rating	12W (current at Nominal 24V DC = 500mA)	
Solenoid Voltages	24V DC	
Minimum Operating Current	5mA at 20v	
Switch Operating Current	Min	5 mA at 20V
	Max	3A at 24V AC-12, AC-15, DC-12, DC-13
Cable Size	26-14 AWG	

*Once the maximum electrical or mechanical number of operations has been reached, the unit must be replaced.

Environmental Specification

Environment Type	Indoor
Max. Altitude	2000m
Ambient Temperature	-5°C to +60°C
Maximum Relative Humidity	80%@<=31°C 50%@40°C
Transient Overvoltages Installation	Uimp 2500V
Pollution Degree (IEC 664)	Degree 2
Ingress Protection	IP65, IP66, IP67

The manufacturer reserves the right to modify the design at any time and without notice. This guide should be retained for future reference.

Dimensional Drawing - MSSR

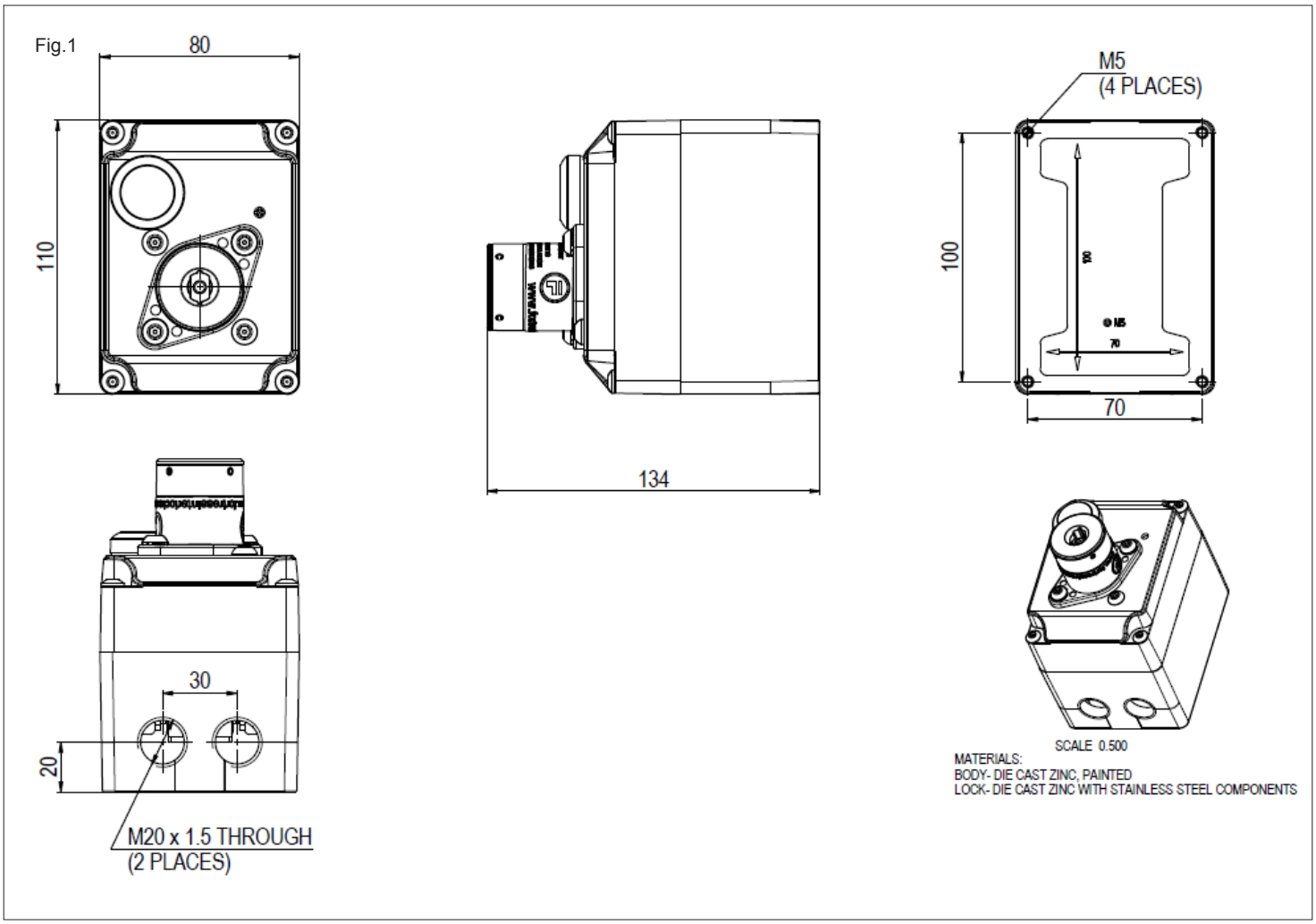
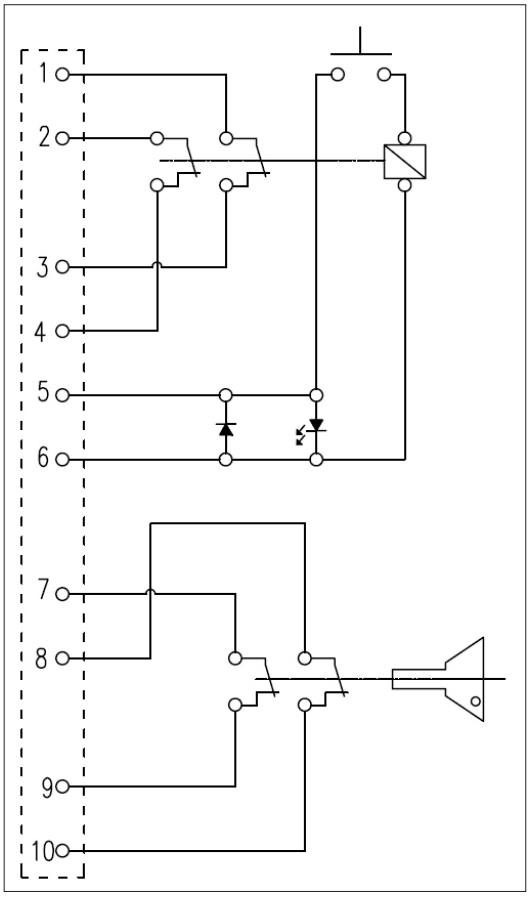
Wiring Diagram 24v Unit