Fortress Interlocks

mGard

Installation Instructions

Power and Control Isolation

S - Key Operated Panel Mounted Switch

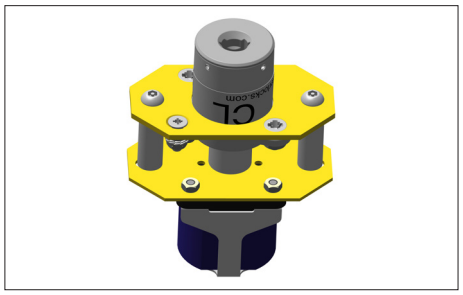

IMPORTANT

This product is designed for use according to the installation and operating instructions enclosed. It must be installed by competent and qualified personnel who have read and understood the whole of this document prior to commencing installation. Any modification to or deviation from these instructions invalidates all warranties. Fortress Interlocks Ltd accepts no liability whatsoever for any situation arising from misuse or mis-application of this product. This product is not to be used as a Mains Isolator or Emergency Stop. The unit is a component to be added to a permanent electrical installation meeting the requirements of the applicable IEC/EN standards.

The voltages used on the S terminals must all be of the same type. i.e. ALL Harzardous Live or ALL Machine Extra Low Voltage.

IF YOU HAVE ANY QUESTIONS OR QUERIES OF ANY NATURE PLEASE CONTACT THE SUPPLIER WHO WILL BE PLEASED TO ADVISE AND ASSIST.

Switch Approvals

Tools and Fixings Required

Ø 6.5 Drill
14" Hex Driver
Ø 36 Drill / Hole saw

The machine must be completely isolated from all electrical supplies before any installation commences.

Mounting

Mount this unit well away from sources of vibration or use anti-vibration mountings in order to avoid the effects of vibration, shock and bump.
Mount the unit only in its correctly assembled condition to flat metal plate of minimum thickness 3.0mm.

1. Locate the unit so that all the lock is within easy reach.
2. Machine the panel as shown in figure 1-4.
3. Remove the 2 M6 screws and refit through panel.
4. All fixing screws must be permanently prevented from removal, either by vibration or by personnel using standard tools.

Electrical Connection

Check that the unit to be installed is of the same electrical type and voltage rating as the machine control circuits. Note that all units are designed to operate at +/-10% of the nominal supply voltage. The use of an incorrect voltage can seriously damage the unit. The electrical system must incorporate fuse protection for all circuits, using a Quick-Acting (F) fuses, (to IEC 127).
Please refer to figure 5 for the Terminal Numbers for the Key Operated Rotary Switch.
Bond the unit to Earth potential via the Earth point provided. The earth wire used must be multi-stranded Yellow and Green PVS sheathed and approved to BS 6231 with minimum conductor cross-sectional area of 2.5mm^2.

The Earth lead must be fitted such that it will be the last to be broken if the wiring loom is pulled from the product. When all wiring is complete, conduct a Protective Earth Test to BS 60204, clause 20. Test the unit for correct operation.

Commissioning

Electrical Function Test

1. Check that all the switches are in the states shown in the wiring diagram - see figure 5.
2. Insert the key and turn 120° clockwise.
3. Check that the rotary switch changes state.
4. Ensure the machine is in a safe state and apply electrical supplies.
5. Ensure that when the key is FREE, the machine is isolated.
6. Ensure that when the key is TRAPPED the supplies are available to the machine.

Maximum Permissible Wire Gauge

Wire Type	Units	20A	32A	63A
Single Core of Stranded Wire	mm^2 AWG	2x2.5 2x12	2x6 2x8	2x16 2x6
Flexible Wire	mm^2 AWG	2x2.5 2x14	2x4 2x10	2x10 2x6

The 20A, 32A and 63A switches will accept 2 wires per terminal, one either side of the terminal screw. Only copper wires are to be used.

Wire Strip Length

The wire strip length is the length of wire left exposed at the end of a cable when the insulation is removed. The recommended lengths are shown below.

Switch	Strip Length (mm)
20A	8
32A	11
63A	15

Minimum Voltage and Current

The standard 20A switch has been tested to work down to 5mA at 20V. For lower voltage and current requirements, please contact Fortress.

DC Ratings

The rotary switches are all AC but have the following DC ratings:

DC Voltage	20A Switch	32A Switch	63A Switch
24V	20A	32A	63A
48V	12A	25A	50A
60V	4.5A	10A	16A
110V	1A	2A	3A
220V	0.4A	0.6A	0.7A
440V	0.27A	0.3A	-

Mechanical and Electrical Life

The mechanical life of the lock mechanism is 1,000,000 operations. The life of the rotary switch is shown below:

Switch Type	Mechanical Life (No of Operations)	AC-21A Electrical Life (No of Operations)
20A	1,500,000	100,000
32A	1,500,000	100,000
63A	1,500,000	100,000

Once the maximum electrical or mechanical number of operations has been reached, the unit must be replaced.

Approvals

The switches are approved to the following:

20A BS, CCC, CSA, GOST, IEC, UL
32A BS, CSA, GOST, IEC, UL
63A BS, CSA, GOST, IEC, UL

where
BS = BS EN 60947 (British and EU)
CCC = China Compulsory Certification
CSA = Canadian Standards Association
GOST = Gosudarstvennyj Standard (Russian)
IEC = IEC 60947 - International Electrical Commission (Global)
UL = Underwriters Laboratory (USA)

International Current Variations

BS/IEC/VDE Current Rating	UL Current Rating	CSA Current Rating
20A	20A	16A
32A	30A	30A
63A	65A	65A

Service and Inspection
Regular weekly inspection of the following is necessary to ensure trouble-free, lasting operation:
1. Correct switching function.
2. Secure mounting of components.
3. Debris and wear.
4. Loose cable terminals.

There are no user serviceable parts in this unit. If damage or wear is found the whole unit must be replaced.

If lubrication / cleaning is required use WD40. The frequency of lubrication / cleaning will depend on the environment. Lubricate / clean at least once a week when used in the concrete industry.
Do not use dry lubricant.

Disposal
This interlock does not contain any certified hazardous materials so should be disposed of as industrial waste.

Liability coverage is voided under the following conditions:
1. If these instructions are not followed.
2. Non-compliance with safety regulations.
3. Installation and electrical connection not performed by authorised personnel.
4. Non-implementation of functional checks.

Environmental Specification

Environment Type	**Indoor**
Max. Altitude	**2000m**
Ambient Temperature	**-5°C to +40°C**
Maximum Relative Humidity	**80%@<=31°C**
	50%@40°C
Transient Overvoltages	
Installation	**Uimp 2500V**
Pollution Degree	**(IEC 664)**
	Degree 2
Ingress Protection	**IP00**

The manufacturer reserves the right to modify the design at any time and without notice.

This guide should be retained for future reference.

Dimensional Drawings - S

Figure 1 - S-CLIN-A02040

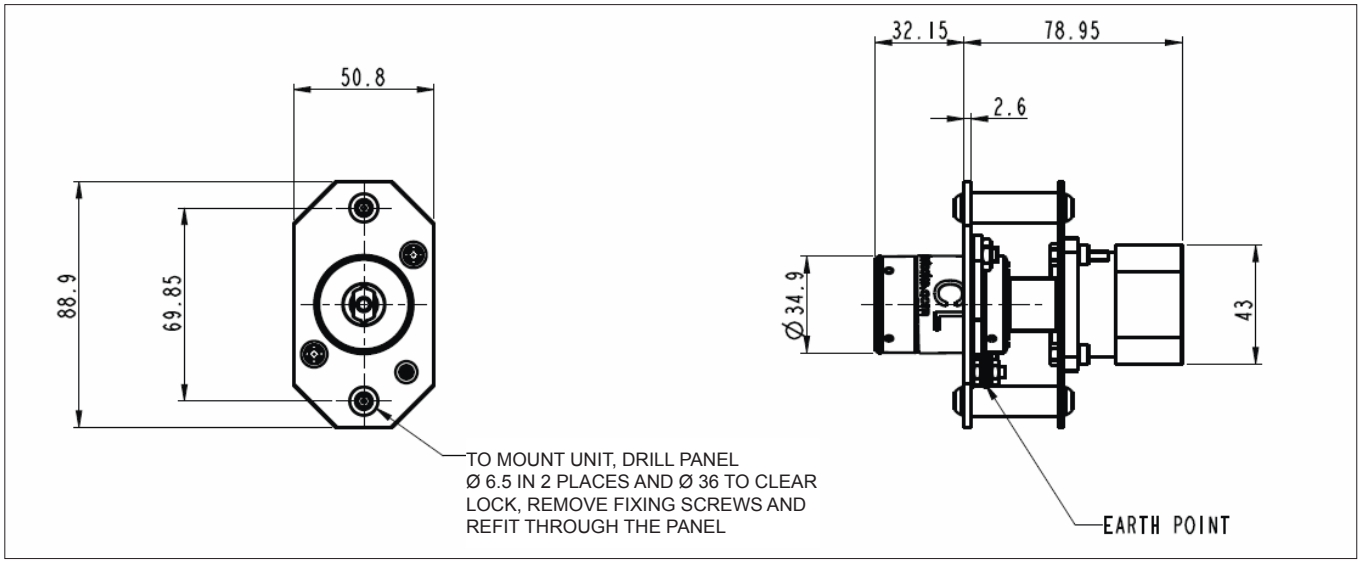

Figure 2 - S-CLIN-A03240

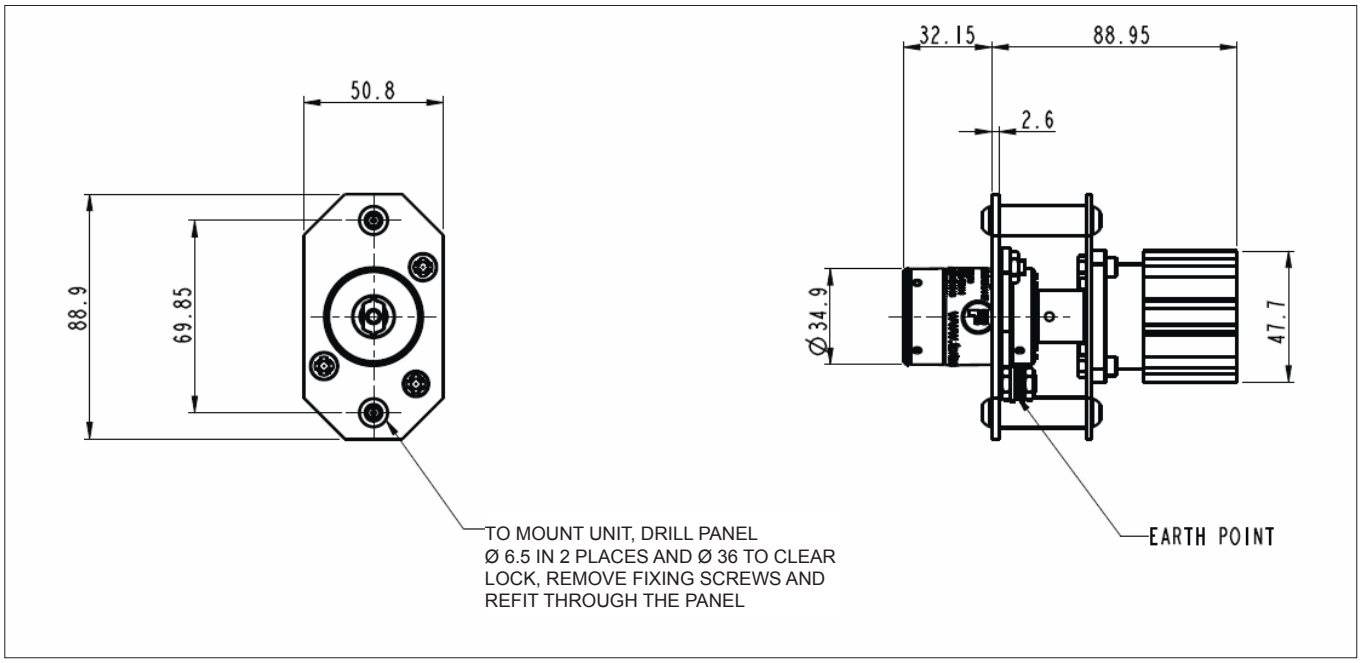

Figure 3 - S-CLIN-A06340

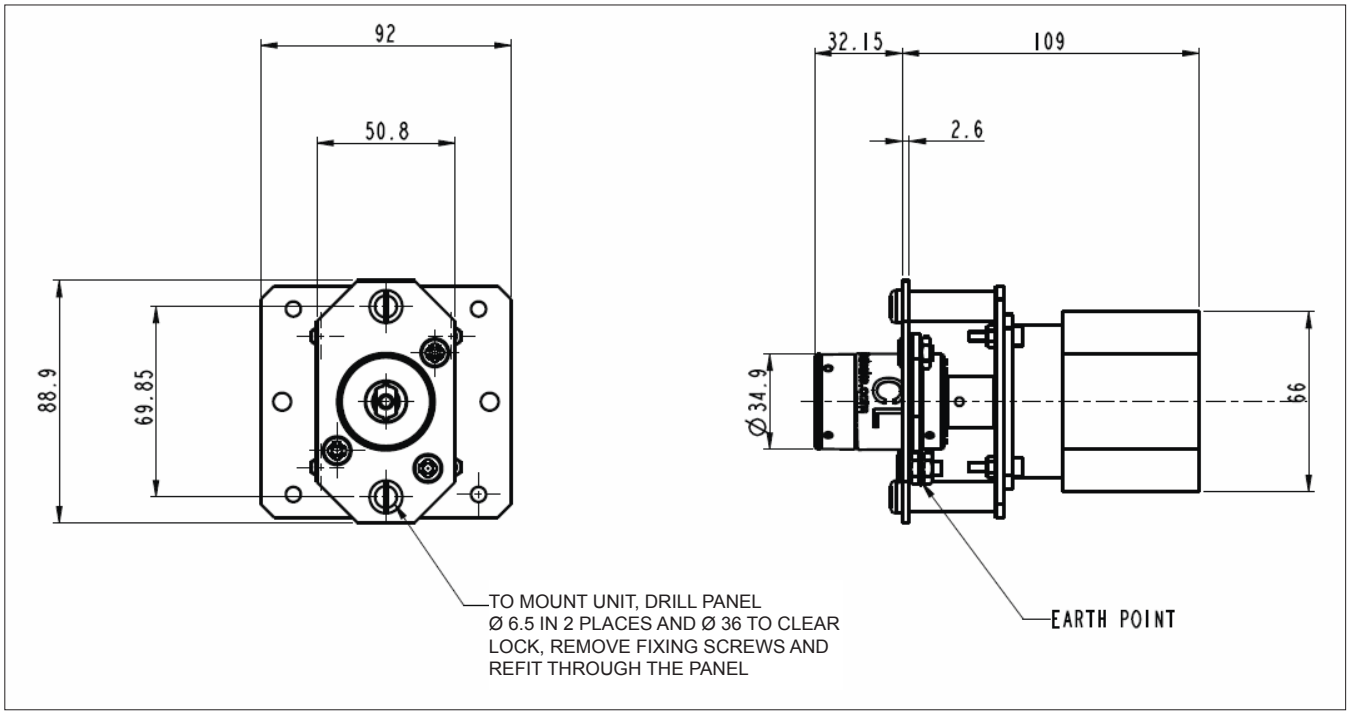
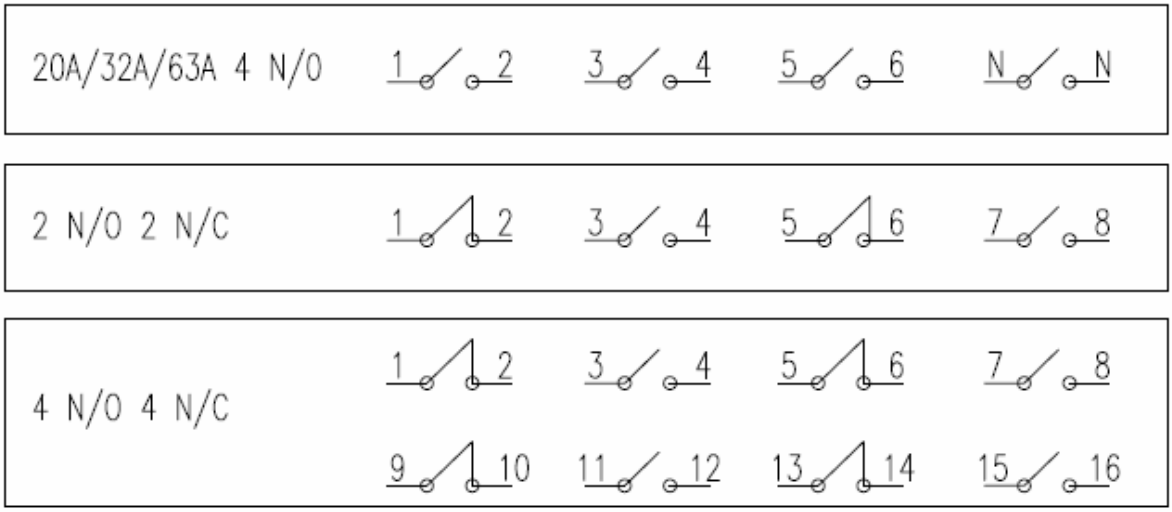
Figure 4 - Wiring Diagram