BML/BMSL

Installation Instructions

Bolt Interlock with Limit Switch Facility

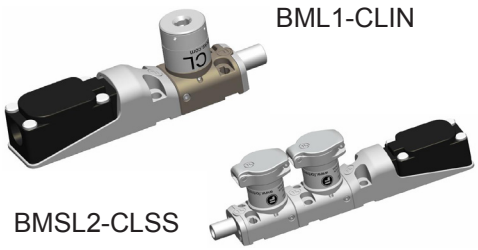

The **BML** is a robust, modular mechanical bolt interlock complete with limit switch to provide status of the bolt position. The mechanical bolt can be used to interface with power breakers, valves, earth switches etc, where hazards need to be indirectly interlocked (often with the use of levers and cams). This product is also available in full stainless steel (**BMSL**). **BML and BMSL** is only surface mounted. **BML** is available with a choice of CL or ML lock mechanisms. All CL / ML locks can be supplied with stainless steel spring-loaded dustcovers and/or colour coding as optional extras. **BMSL** is available with a choice of CLS or MLS lock mechanisms. All CLS / MLS locks are supplied with stainless steel spring-loaded dustcovers as standard and colour coding as an optional extra.

IMPORTANT: This product is designed for use according to the installation and operating instructions enclosed. It must be installed by competent and qualified personnel who have read and understood the whole of this document prior to commencing installation. Any modification to, or deviation from these instructions invalidates all warranties. Fortress Interlocks Ltd accepts no liability whatsoever for any situation arising from misuse or mis-application of this product.

IF YOU HAVE ANY QUESTIONS OR QUERIES OF ANY NATURE WHATSOEVER PLEASE CONTACT THE SUPPLIER WHO WILL BE PLEASED TO ADVISE AND ASSIST.

Construction BML
Body Housing: Die-cast zinc with pearl bronze finish and stainless steel.
Internals: All stainless steel
Bolt: All stainless steel.
Lock Mechanism: CL or ML lock types are of die-cast zinc body with stainless steel operating mechanism.
Key: Stainless steel.

Construction BMSL
Body Housing:Full stainless steel
Internals: Full stainless steel
Bolt: All stainless steel.
Lock Mechanism: CLS or MLS lock types are of all stainless steel.
Key: Stainless steel.
Spring Loaded Dustcover: Stainless steel.

Tools and Fixings Required
2 off Cap head / hexagonal head bolts for each module, including the limit switch module.

Front of Board mounting:
M6 x 25 or ¼" x 1"

Suitable driver for above.

If using through holes:
•1 off Drill Ø6.5 (or Ø5/16").
•2 off M6 (or ¼") Full nuts per module.
If using threaded holes:
•1 off Drill Ø5 (or Pilot Drill for chosen ¼" Thread).
•1 off M6 (or ¼") Tap and wrench.

End Fixings for mounting
M6 x 20mm longer than the panel thickness (Maximum length).

Mounting
Mount this unit well away from sources of vibration or use anti-vibration mountings in order to avoid the effects of vibration, shock and bump.
Mount the unit only in its correctly assembled condition to flat steel plate of minimum thickness 3.0mm or 6.0mm if aluminum. **BML/BMSL** can be mounted in any orientation, observing the following rules:

1 Locate the unit so that all the locks are within easy reach.
2 The bolt may be used to interface with mechanical linkages e.g. levers or cams on proprietary switchgear applications. Mounting kits must be either fabricated to suit or some are available from switchgear manufacturers. The bolt travels a distance of 16mm when free. When sequencing is used to prevent movement of the bolt, tolerances in the lock allow up to 6mm of bolt movement (see Fig.1). Ensure this tolerance movement does not allow any proprietary application to change state.
3 Mount the unit to the panel using the chosen fixings.
4 Tighten the fixings to a Torque of 8 to 10 N m (5.9 to 7.4 lbf.ft)
5 All fixing screws must be permanently prevented from removal, either by vibration or by personnel using standard tools.
6 If a bolt extension is used, it should be supported at approx 25mm from the end to keep it straight.

All fixings must be used.

Fig.1.

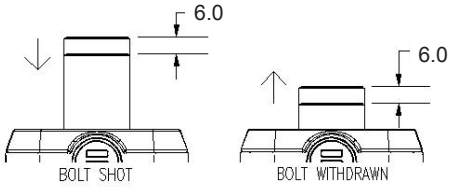

A 3mm gap between the front face of a BML/BMSL and any galvanised metal work is recommended to reduce the likeliness of a galvanic reaction occuring.

Electrical Connection
Check the unit to be installed is of the same electrical type and voltage as the machine control circuits. The use of incorrect voltage can seriously damage the unit. See the wiring diagram for connection details.

Approvals
• UL - Listed- IND.CONT.EQ170M
• CE - IEC60947-5-1 / EN60947-5-1
AC15 240V 1.5A
• CSA - B300 - R300 Type 4 x ind. use and 12
• CCC

Functionality
BML1/BMSL1 (Single Module) - With the key free the bolt is usually in the shot (extended) position. To withdraw (retract) the bolt the key must be inserted and trapped. As the key turns, operating the bolt, the internal runnerbar simultaneously operates the limit switch. For full details of the bolt/key/switch interaction see the sequence table. Other sequences available on request.

BML2-10 / BMLS2-5 (Multiple Modules) - With the primary key free the bolt is usually in the shot (extended) position. To withdraw (retract) the bolt the primary key must be inserted, turned and trapped in the primary lock, and the secondary key turned and removed from the secondary lock. As the primary key turns, operating the bolt, usually the internal runnerbars simultaneously operates the limit switch. For full details of the bolt/primary key/switch interaction see the sequence table. (other sequences available on request).

Sequencing
The **BML/BMLS** system is extremely flexible in terms of its sequencing possibilities. Two types of operation are possible. These are used individually or mixed to provide complex operation. The two types of operation are:

Sequential Operation
This is when the key in the module interacts only with its neighboring modules. This dictates the order in which keys are inserted and removed.

Non-Sequential Operation
This is when two or more keys work together in a group. In a non-sequential system, any of the keys in the group can be operated together. Therefore, the order in which keys are inserted or removed from the group is not dictated. However, all of the keys in the group must be either all inserted and trapped or all removed.
The BML/BMSL sequence should have been specified at the purchasing stage. If the sequence needs to be changed, contact Fortress Interlocks.
Fitting of Additional Key Exchange Modules
The XMA/XMSA is supplied with its own Installation Instructions.
Conversion from BML to XML or BMSL to XMSL
It is possible to convert a BML to an XML or a BMSLto an XMSL. However, this must to be done with care as the sequence may require modification. If the BML/BMSL needs to be changed to an XML/XMSL, contact Fortress Interlocks.
Conversion from BML to DML or BMSL to DMSL
It is possible to convert a BML to an DML or a BMSL to an DMSL. However, this must to be done with care as the sequence may require modification. If the BML/BMSL needs to be changed to an DML/DMSL, contact Fortress Interlocks.
Commissioning
Mechanical Function Test - Typical example Sequence
1 Start with the primary key inserted and the secondary key(s) removed.
2 Insert the secondary keys.
3 Remove the primary key and check that the bolt moves to the shot or withdrawn position depending upon product ordered, trapping or releasing the appropriate interfaced device as required.
4 Check that all of the secondary key(s) are trapped.

Electrical Function Test
1 Check the switch is in the state shown in the wiring diagram, on the following page.
2 Insert primary key (in typical sequence) and turn 120° clockwise or turn 120° anti clockwise and remove the key.
3 Check that the limit switch changes state.
Service and Inspection
Regular weekly inspection of the following is necessary to ensure trouble-free, lasting operation:
1 Secure mounting of components.
2 Debris and wear.
3 If lubrication/cleaning is required all locks should be lubricated with WD40. **Do not use dry lubricant**. The frequency of lubrication/cleaning will depend on the environment. Lubricate/ clean at least once a week when used in the concrete industry.
There are no user serviceable parts in a BML/ BMSL module. If damage or wear is found, the whole module must be replaced.

Disposal
The BML/BMSL does not contain any certified hazardous materials so should be disposed of as industrial waste.
Liability coverage is voided under the following conditions:
1 If these instructions are not followed.
2 Non-compliance with safety regulations.
3 Installation not performed by authorised personnel.
4 Non-implementation of functional checks.

BML Drawing

PRODUCT	DIM A - OVERALL LENGTH	DIM B - NO OF CL LOCKS	DIM C - NO OF HOLES
BML1	182.65	1	4
BML2	239.8	2	6
BML3	296.95	3	8
BML4	354.1	4	10

VERSION SHOWN IS BML2-CLIN.
ALL DIMENSIONS ARE NOMINAL AND SUBJECT TO MANUFACTURING TOLERANCES.

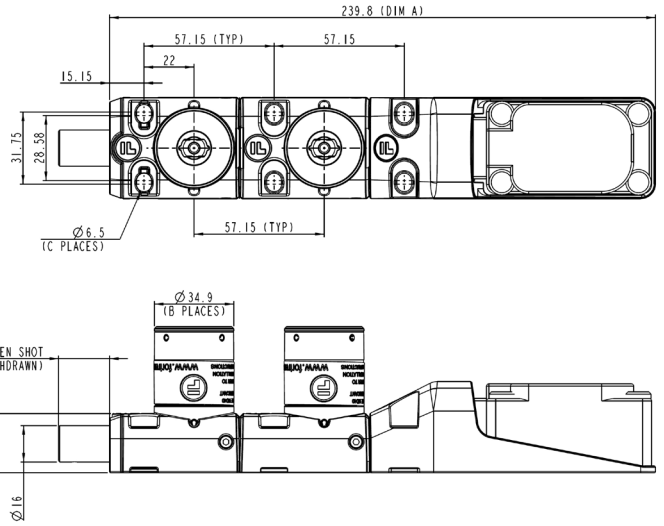

BMSL Drawing

PRODUCT	DIM A - OVERALL LENGTH	DIM B - NO. OF CLS LOCKS	DIM C - NO. OF HOLES
BMSL1	182.65	1	4
BMSL2	239.8	2	6
BMSL3	296.95	3	8
BMSL4	354.1	4	10

VERSION SHOWN IS BMSL2-CLSS.
ALL DIMENSIONS ARE NOMINAL AND SUBJECT TO MANUFACTURING TOLERANCES.

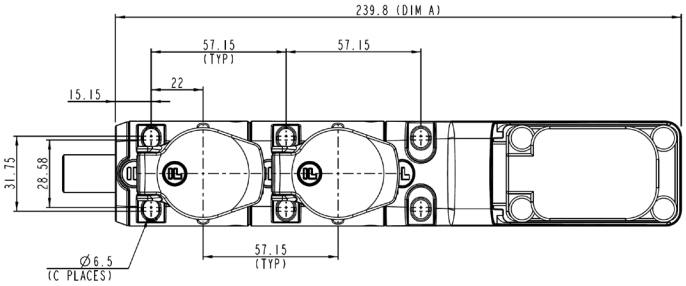

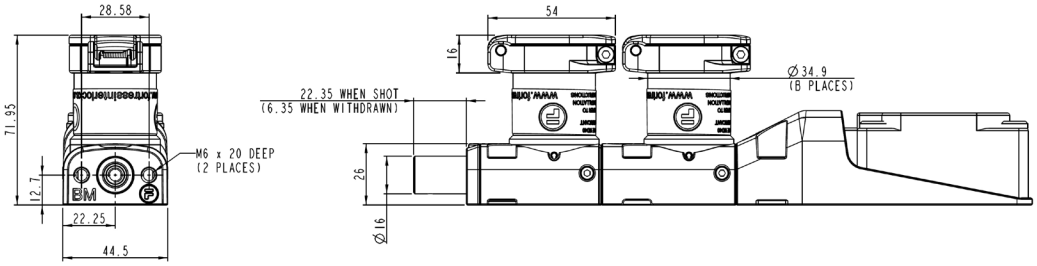

BM(S)L Wiring & Sequence Table

BM(S)L WIRING DETAILS

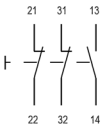

SEQUENCE	PRIMARY KEY POSITION	BOLT POSITION	SWITCH CONTACTS	
			2 N/C	1 N/O
			TERMINAL NO. 21 - 22 31 - 32	TERMINAL NO. 13 - 14
A	FREE	SHOT	OPEN	CLOSED
A	TRAPPED	WITHDRAWN	CLOSED	OPEN
B	FREE	SHOT	CLOSED	OPEN
B	TRAPPED	WITHDRAWN	OPEN	CLOSED
C	FREE	WITHDRAWN	CLOSED	OPEN
C	TRAPPED	SHOT	OPEN	CLOSED
D	FREE	WITHDRAWN	OPEN	CLOSED
D	TRAPPED	SHOT	CLOSED	OPEN

NOTE:- PRIMARY KEY OPERATES BOLT & SWITCH TOGETHER