TD Electronic Time Delay Unit

Installation Instructions

Fortress Interlocks

General
The TD unit is a robust, solenoid controlled key release interlock. It utilises an industrial, electronic Safety Timer Relay to release the key after a programmable time delay. 24V dc between 60 and 600 seconds. 110V ac and 230V ac units have settings from 30 to 300 seconds.This is particularly useful when a pre-determined machine run down period is required. The TD unit internal time delay is initiated by way of a request key and both request and access key are compatible with Fortress' mGard range of trapped key interlocks. These provide an efficient and flexible range of products to suite diverse applications. When properly installed, the TD unit provides safe access and control of a variety of machinery.

IMPORTANT
ALL supplies must be isolated before the TD unit is opened This product is designed to meets the requirements of the following standards, EN 60947-5 and EN 954

IF YOU HAVE ANY QUESTIONS OR QUERIES OF ANY NATURE WHATSOEVER PLEASE CONTACT THE SUPPLIER WHO WILL BE PLEASED TO ADVISE AND ASSIST.

Functioning
When the request key is inserted and rotated clockwise, an electronic Safety Timer Relay is initiated and the blue "Timer Active" indicator lamp will illuminate.

After the user programmable time period has expired, the blue lamp will extinguish and the green "Energise Solenoid" push button will illuminate.

At this point, it is still possible to cancel the timer request by rotating the request key in an anti-clockwise direction.

While the green "Energise Solenoid" push button is depressed, the access key becomes free to rotate and remove from the unit.

The green lamp remains illuminated to signal the access key has been removed and the request key becomes trapped. Once the access key is re inserted, both lamps extinguish and the request key becomes free to remove.

Tools and Fixings Required
- Large cross-head screwdriver.
- Drill and Tap for M6 bolts (if used (Recommended)).
- Suitable driver for fixings used 3.5mm Flat blade electrical screwdriver .
- 4 x M6 Cap-head or Pan-head screws

Mounting
This unit would normally be installed on a vertical surface, such as a wall or the machine cabinet. Other orientations are possible as long as access to the illuminated push buttons, key and nomenclature is ergonomic for the application. The surface must be suitably robust, flat and non-movable. Four M6 nylon sealing washers are provided for use when mounting the unit.

Protection Against Environmental Influences
A lasting and correct safety function requires that the unit be protected against the ingress of foreign bodies such as swarf, sand, blasting shot, etc. The unit is to be mounted away from the machine, or by the use of anti-vibration mountings, in order to avoid the effects of vibration, shock and bump.

1. Determine the location of the TD unit so that operation of the illuminated push buttons and key are possible.
2. Open the unit lid to provide access to the mounting holes at the back of the unit.

N.B. When opening the lid do not put any strain on the interconnecting wiring loom as this may cause damage to the unit.

3. Mount the enclosure assembly to the mounting surface. Use M6 screws and the M6 nylon washers (washers provided). If the unit is mounted to a mounting plate, it should be of minimum thickness 3mm.

NB Ensure that any screws that protrude through any mounting surface are covered and do not interfere with any other wiring or equipment.

All fixing screws must be permanently prevented from removal, either by vibration or by personnel using standard tools.

4. Determine the best position for the cable entries and drill the box for them, ensuring no damage to any internal components or wiring. All wiring must use cable glands that are suitable for the application.
5. Fix the cable glands in place and feed in the electrical wiring, taking care not to interfere with the internal TD wiring.
6. Make the electrical connections as detailed below.

Electrical Connection

1. Check that the operating voltage of the unit to be installed is of the same electrical type and voltage rating as the machine control circuits. This information can be found on the laser mark on the front of the TD unit. Note that all units are designed to operate at +/-10% of the nominal supply voltage. The use of an incorrect voltage can seriously damage the unit. AC units are suitable for 50/60 Hz.
2. Double check that the electrical supply is isolated and attach suitable conduit(s) via the previously fitted cable gland(s). Correct size cable glands/blanking plugs must be used to achieve IP67 sealing.
3. Bond the enclosure to Earth potential via the Earth point provided. The earth wire used must be multi-stranded Yellow and Green PVC sheathed and approved to BS 6231 with conductor cross-sectional area of 2.5mm². The Earth lead must be fitted such that it will be the last to be broken if the wiring loom is pulled from the product.
4. Make the electrical connections, referring to the information below.

The TD unit incorporates fuse protection for the unit supply. The unit supply fuse is rated at 1A, 250V slow blow to IEC 127. The fuse is 20mm x 5mm diameter.

User connections are as follows:

Terminal 1. Earth

Terminal 2. (Permanent Supply)
Permanent supply to the TD unit. This terminal incorportaes the internal fuse.

Terminal 3: (Supply Common Return)
For DC installations, connect this terminal to 0V of the machine control system. For AC installations, this will be Neutral.

Setup

Mechanical Function Test (Unpowered)
1. Insert the key in the bottom lock & turn clockwise.
2. Turn the top key anti-clockwise and remove from the unit. If required open the lid and depress the solenoid plunger to allow removal of the key from the unit.
3. Replace the lid of the TD unit.
4. With the top key still removed ensure the bottom key is now trapped.
5. Ensure that the key that is to be inserted into the TD unit operates the mechanical interlocking system in place. The key must only be available when all other protected guards are in place.
6. Insert the key into the lock. It must lock in position. Now remove the key from the bottom lock.

Electrical Function Test

N.B The Safety Timer Relay delay period is programmable and may need to be adjusted to suit the machine run down period as determined by a risk assessment.

The time delay is adjusted by rotating a red rotary switch on the Safety Timer Relay with a small electrical screw driver, the Safety Time Relay is located inside the TD unit.

NEVER OPEN THE UNIT FOR ANY REASON, INCLUDING ADJUSTMENT WITHOUT ISOLATING THE MACHINE.

1. Supply power to the TD unit and ensure the access key is trapped. Neither lamp should be illuminated.
2. Insert and turn the request key and ensure the blue "Timer Active" lamp illuminates.
3. After the pre-programmed time period, observe the blue "Timer Active" lamp extinguishes and the green "Energise Solenoid" lamp illuminates.
4. Depress the "Energise Solenoid" button and ensure it is possible to release the access key.
5. Once the access key is released, ensure the request key has become trapped.
6. Re-insert and turn the access key and ensure the request key has now become free. Observe the green lamp extinguish.

Fortress Interlocks

Dimensions Diagram

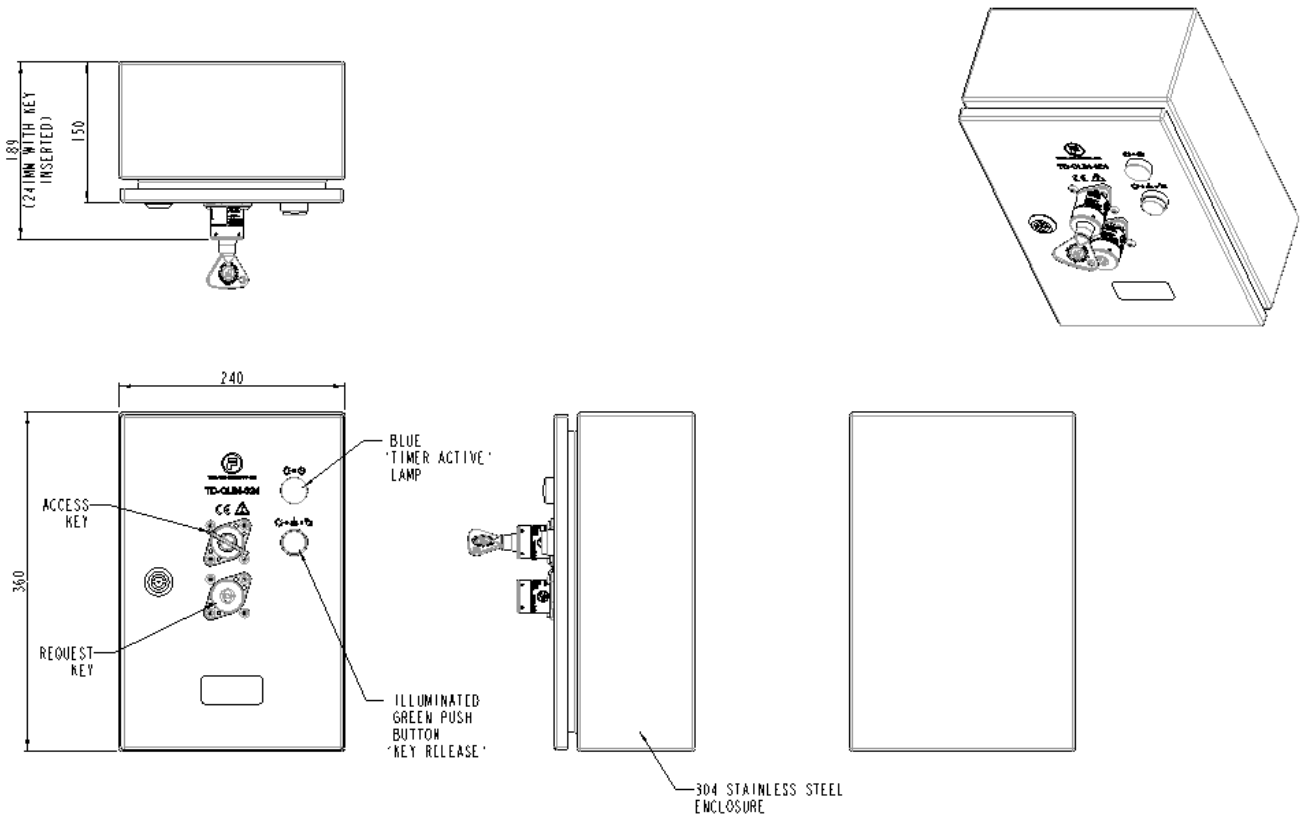

Terminal Diagram

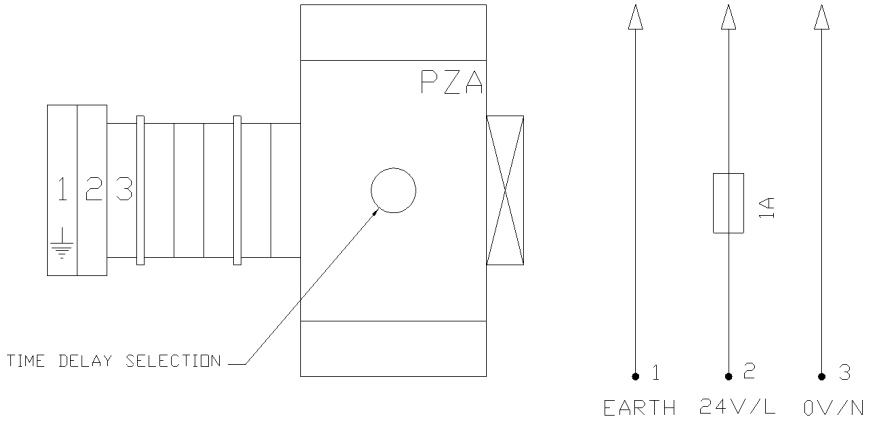

Service and Inspection

Regular weekly inspection of the following is necessary to ensure trouble-free, lasting operation:

- Correct switching function
- Secure mounting of components
- Debris and wear
- Sealing of cable entry
- Loose cable terminals or plug connectors

The Lock Assembly should be lubricated with WD40 lubricant, every 10,000 operations.

There are no user serviceable parts in the TD unit. If damage or wear is found with an assembly, please contact your local Fortress stockist. The complete interlock must be replaced after 1 million switching operations.

Disposal

This interlock does not contain any certified hazardous materials so should be disposed of as industrial waste.

Liability coverage is voided under the following conditions:
- if these instructions are not followed
- non-compliance with safety regulations
- installation and electrical connection not performed by authorised personnel
- non-implementation of functional checks.

The manufacturer reserves the right to modify the design at any time and without notice.

This guide should be retained for future reference.